REV.	DATE	ECN NO.	MODIFICATION	APPROVER
A	2018/09/12		新版发行	Jason
A1	2020.11.26	RD00320112601	删除端子保持力，修改沾锡温度.工作温度	Jason

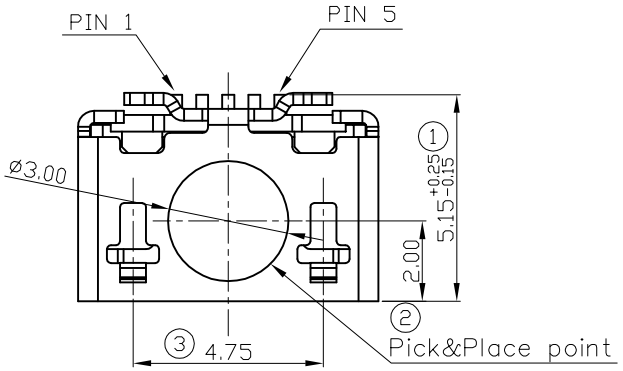

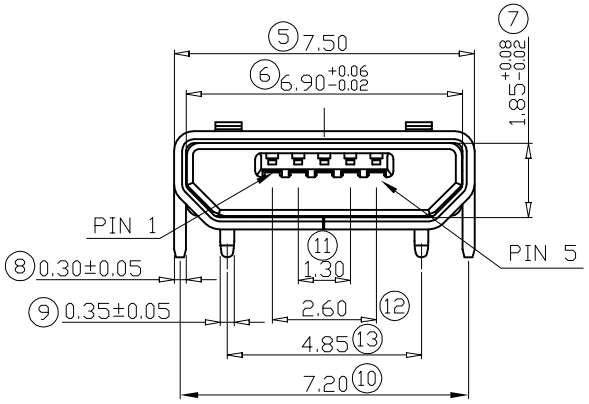

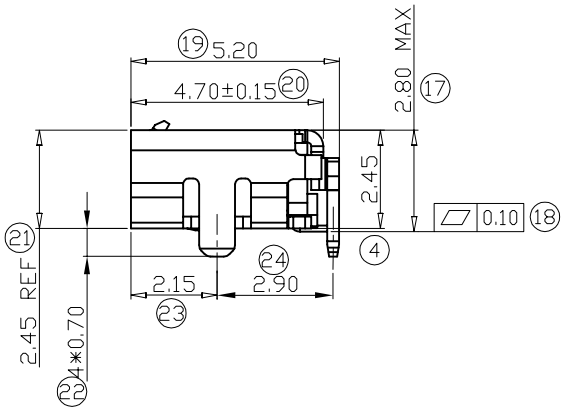

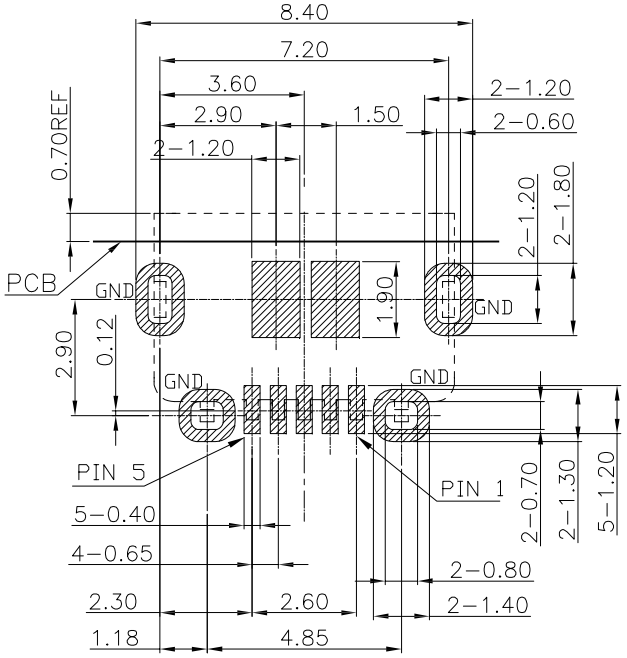

RECOMMEND PCB LAYOUT
TOLERANCE: ±0.05
TOP VIEW

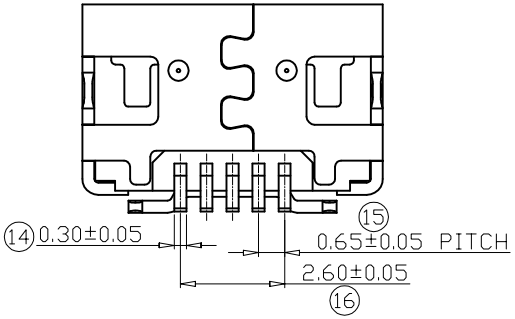

NOTE:
1. Materials:
1.1Housing：Thermoplastic,UL94V−0,black;
1.2Contact：Copper alloy;Nickel ground Gold Plated;
1.3Shell：Stainless steel，Tin plating;
2. Performance:
2.1 Current rating: 1.0A;
2.2 Contact resistance: 30mΩ MAX;
2.3 Insulation resistance: 1000MΩ MIN 500V DC;
2.4 Withstand voltage: 250V AC;
2.5 Solderability:
Temperature 245±5℃, time 5±0.5s; (A1)
2.6 Mating force: 3.57kgf MAX,
Un−mating force: 1.00kgf MIN;
2.7 Life: 10000 cycles;
2.8 Resistance to heat: over test:
Temperature 260±5℃, time 2 minutes;
2.9 Operating temperature: −30℃~+85℃. (A1)

Contact Number	Signal Name
1	VBUS
2	D−
3	D+
4	ID
5	GND

GENERAL TOLERANCE			
SELECT	✓		
TOL. / ON.	1	2	3
X.XXX	±0.05	±0.05	±0.15
X.XX	±0.15	±0.13	±0.25
X.X	±0.25	±0.25	±0.50
X.		±0.38	±1.00
ANGLE	±1°		

UNITS mm
MAT'L
FINISH
Q'TY

NAME: MICRO USB 5P
PART NO: USB205FB-C1014227
APPD:
CHKD:
DR: ming2020.11.26

ATOM® 深圳市爱特姆科技有限公司 SHENZHEN ATOM TECHNOLOGY CO.,LTD.

TITLE: MICRO USB 5P FEMALE SMT B TYPE 无定位柱 四脚全插 无卷边 镀金1u"

DWG NO. ATOM-A04142

SCALE	SHEET	REV
1:1	1/1	A1